ROTARY LIFT®

The World's Most Trusted Lift™

A DOVER™ COMPANY

Four-Post Lifts

Professional Automotive

Features and Benefits

Maximize your productivity by using the lift that's right for you. We offer more productivity features than anyone in the industry. More importantly, our lifts are designed to meet or exceed strict ANSI standards and go through rigorous safety tests such as a 1.5 times rated capacity load test, lock test by cutting the cables and deformation tests. With our attention to detail and innovation, there is no other four-post on the market that matches Rotary's quality and value.

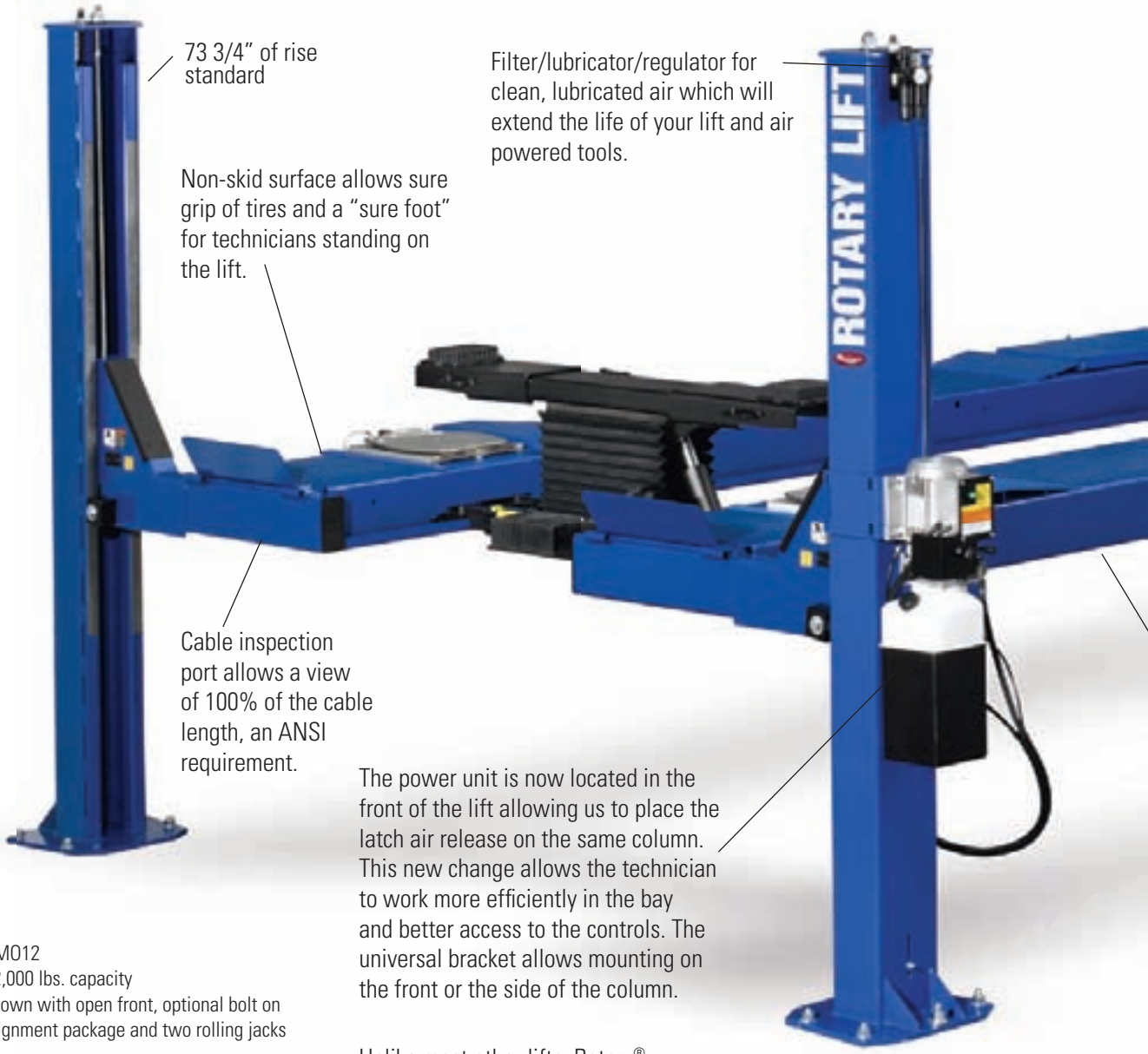

73 3/4" of rise standard

Filter/lubricator/regulator for clean, lubricated air which will extend the life of your lift and air powered tools.

Non-skid surface allows sure grip of tires and a "sure foot" for technicians standing on the lift.

Cable inspection port allows a view of 100% of the cable length, an ANSI requirement.

The power unit is now located in the front of the lift allowing us to place the latch air release on the same column. This new change allows the technician to work more efficiently in the bay and better access to the controls. The universal bracket allows mounting on the front or the side of the column.

Unlike most other lifts, Rotary® power units are designed and built by Rotary, for Rotary lifts.

Shown: SM012
12,000 lbs. capacity
shown with open front, optional bolt on alignment package and two rolling jacks

Adjustable latch bars ensure the runways are level when resting on the latch bars at any of the multiple locking positions.

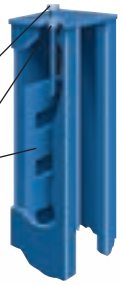

A dual function Sentinel Lock™ system features a patented (U.S. Patent No. 6,446,757) slack cable guide arm that stays "on guard" to manage the lock latch. In a slack cable situation, the lock system kicks the lock into position. Fewer parts, less opportunity for service issues and more peace of mind.

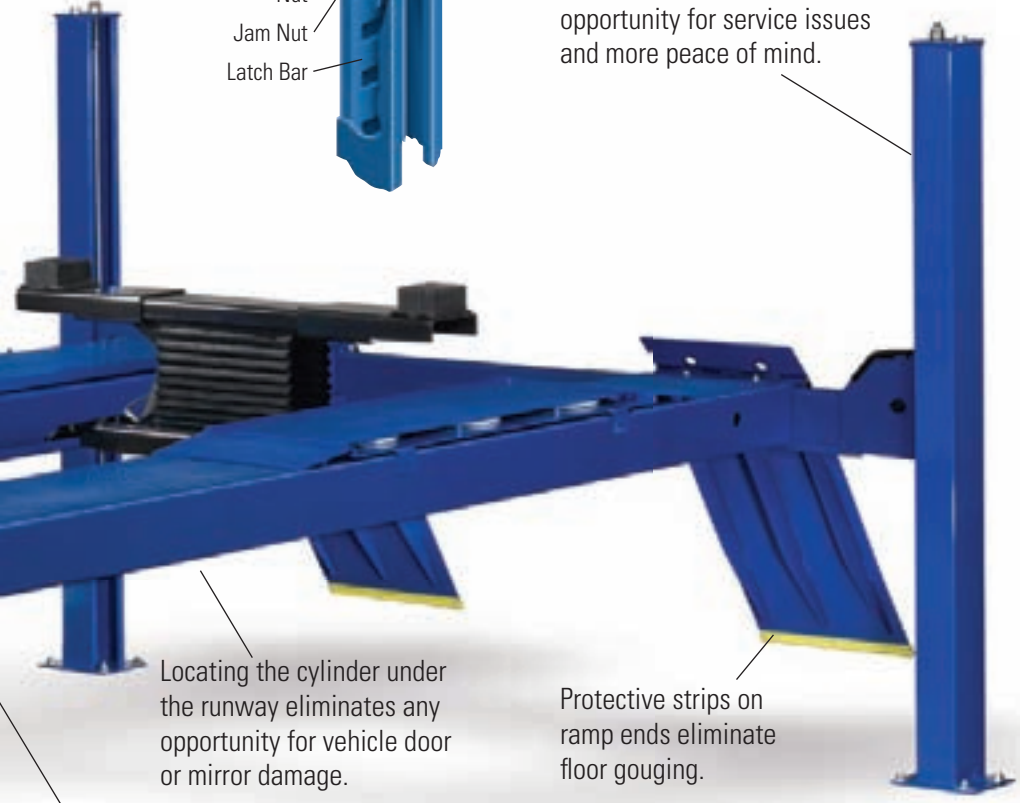

Locating the cylinder under the runway eliminates any opportunity for vehicle door or mirror damage.

Protective strips on ramp ends eliminate floor gouging.

One piece runway with non-welded track that is part of the runway for strength and durability.

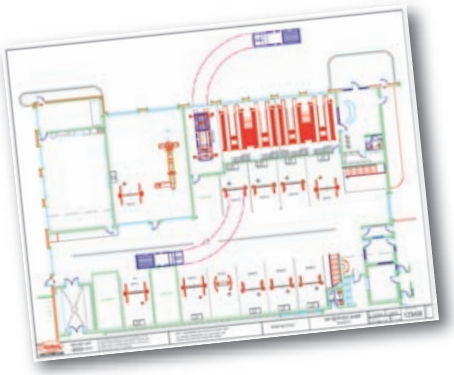

assistPRO™

professional facility planning assistance

Rotary works directly with you, your local distributor, equipment program managers and architects, using the latest tools and techniques, to develop an efficient and capable service area to fit your needs. Our assistPRO™ service provides:

- Product selection and analysis
- Vehicle turning radius and traffic flow analysis
- Customized layout for each facility
- Detailed CAD blocks are available to architects
- Final drawings in the format of your choice
- Written specifications for approval and quoting process
- Continuing education for architects

Shown: SM12
12,000 lbs. capacity closed front lift with optional rolling jacks and bolt on alignment equipment

Shown: SM18
18,000 lbs. capacity with optional rolling jacks

Four-Post Configurations

Runway Lengths & Widths

Wheelbase ranges: 163" - 245"
Track widths: 13" - 96"

Extended ramps are available for low-profile vehicles.

Shown: SM101
10,000 lbs. capacity

Shown: RFL25
25,000 lbs. capacity

Open or Closed Front

12,000 lbs. capacity lifts can be ordered with an open front to allow easy access to under vehicle components and rolling jack usage (standard on alignment lifts). May be used as open front or open rear.

Alignment Equipment

Alignment and front-end adjustments are quick, easy and accurate. All of our alignment equipment is fully compatible with all of the 3-D equipment on the market today.

Shown: ARO12
12,000 lbs. capacity open front alignment lift with two rolling jacks, recessed front radius gauges and rear slip plates

stainless steel radius gauges standard

Shown: AR12
12,000 lbs. capacity closed front alignment lift with two rolling jacks

Standard Alignment Lift Features

- Includes two 6,000 lbs. capacity rolling jacks with drop-in rubber adapters and an internal airline for organized, efficient operation. Swing air jacks also available as an option
- 73 3/4" rise standard
- Open front or open rear design
- Air filter/lubricator/regulator keeps your air clean and regulated to extend the life of your air tools
    - Recessed 45° turning radius gauges (4,500 lbs. capacity each) are made of 304 stainless steel for corrosion resistance
    - Recessed 4-wheel steer slip plates
- Three wheelbase options
- Portable work step

Shown: FA5101
bolt-on alignment kit

Bolt-on alignment kit allows standard drive-on runways to convert to alignment runways and is fully compatible with all of the 3-D equipment on the market today.

Productivity Equipment

Shown: RJ6000
6,000 lbs. capacity
4,500 lbs. capacity also available

Shown: SJ6000
6,000 lbs. capacity swing air jack pivots and lays flat between the runways when not in use

Shown: FC5710
15,000 lbs. capacity
9,000 lbs. capacity also available

Shown: FC134-17
portable work step

Shown: FC5282
Low profile oil drain pan with 30 gallon capacity

Shown: SI00006
extended ramp kits for low profile vehicles

High Capacity Lift Advantages

- 18,000 and 30,000 lbs. capacity models available
- Multiple wheelbases available: 235", 271", 302"
- Multiple runway lengths available
- No obstructions from column to column for easy access to the vehicle
- Third party ETL certified
- Standard internal air package
- Additional accessories available for alignments

Shown: SM301
30,000 lbs. capacity
with optional rolling jacks

revolution®
By Rotary Lift® The World's Most Trusted Lift™

Revolution™ brand four-post lifts are your source for residential storage and maintenance.

Professional grade lifts built by Rotary - specifically designed for the home enthusiast.

- Storage -Double your garage parking capacity
- Versatility - Store almost anything including lawn mowers, boats, bicycles etc. on top to make more room in your garage
- Two wheelbase options available

Shown: RFP7-XLT
7,000 lbs. capacity

For more information visit www.revolutionlifts.com

For more information about Rotary® products, visit www.rotarylift.com or call 800.640.5438

Four-Post Specifications

Standard and Alignment Lifts

	Model:		SMO12	SM12	ARO12	AR12
	Max. Wheelbase*	S L EL2	158 1/2" (4026mm) 182 1/2" (4636mm) 206 1/2" (5245mm)	158 1/2" (4026mm) 182 1/2" (4636mm) 206 1/2" (5245mm)	158 1/2" (4026mm) 182 1/2" (4636mm) 206 1/2" (5245mm)	158 1/2" (4026mm) 182 1/2" (4636mm) 206 1/2" (5245mm)
	Max. Two Wheel Align*	S L EL2	N/A	N/A	153" (3886mm) 178" (4521mm) 202" (5131mm)	153" (3886mm) 178" (4521mm) 202" (5131mm)
	Max. Four Wheel Align*		N/A	N/A	125" (3175mm)	125" (3175mm)
A.	Rise		73 3/4" (1873mm)	73 3/4" (1873mm)	73 3/4" (1873mm)	73 3/4" (1873mm)
B.	Length Overall	S L EL2	19' 9" (6020mm) 21' 9" (6629mm) 23' 9" (7239mm)	19' 8 1/4" (6001mm) 21' 8 1/4" (6610mm) 23' 8 1/4" (7220mm)	19' 9" (6020mm) 21' 9" (6629mm) 23' 9" (7239mm)	19' 8 1/4" (6001mm) 21' 8 1/4" (6610mm) 23' 8 1/4" (7220mm)
C.	Width Overall**		11' 3 1/4" (3435mm)	10' 11 5/8" (3343mm)	11' 3 1/4" (3435mm)	10' 11 5/8" (3343mm)
D.	Inside of Columns**		114 1/4" (2902mm)	116" (2946mm)	114 1/4" (2902mm)	116" (2946mm)
E.	Between Columns	S L EL2	171" (4343mm) 195" (4953mm) 219" (5563mm)	172 3/8" (4378mm) 196 3/8" (4988mm) 220 3/8" (5598mm)	171" (4343mm) 195" (4953mm) 219" (5563mm)	172 3/8" (4378mm) 196 3/8" (4988mm) 220 3/8" (5598mm)
F.	Height of Columns		7' 7 1/8" (2315mm)	6' 10 1/8" (2085mm)	7' 7 1/8" (2315mm)	6' 10 1/8" (2085mm)
G.	Width of Runways		20" (508mm)	20" (508mm)	20" (508mm)	20" (508mm)
H.	Height of Runways		7" (178mm)	7" (178mm)	7" (178mm)	7" (178mm)
I.	Width Between Runways		43" (1092mm)	43" (1092mm)	43" (1092mm)	43" (1092mm)
	Lifting Capacity		12,000 lbs. (5443kg)	12,000 lbs. (5443kg)	12,000 lbs. (5443kg)	12,000 lbs. (5443kg)
	Motor		2 HP	2 HP	2 HP	2 HP
	Voltage Single Phase		208v-230v	208v-230v	208v-230v	208v-230v
	Time of Full Rise		55 seconds	55 seconds	55 seconds	55 seconds
	Min. Bay Size	S L EL2	15' x 23' (4572 x 7010mm) 15' x 25' (4572 x 7620mm) 15' x 27' (4572 x 8230mm)	15' x 23' (4572 x 7010mm) 15' x 25' (4572 x 7620mm) 15' x 27' (4572 x 8230mm)	15' x 23' (4572 x 7010mm) 15' x 25' (4572 x 7620mm) 15' x 27' (4572 x 8230mm)	15' x 23' (4572 x 7010mm) 15' x 25' (4572 x 7620mm) 15' x 27' (4572 x 8230mm)

Identifying Model Numbers

Lift Type	Lift Capacity (x 1000)	Options
SMO	12	S
ARO	12	EL2

Examples:

SMO12S = Standard Model Open yoke 12,000 lbs. capacity lift with shorter length.

ARO12EL2 = Alignment Rack Open-front 12,000 lbs. capacity lift with extended length.

Lift Types:

SMO .. Standard Model open front or open rear lift
SM.....Standard Model lift
ARO ..... Alignment Rack Open front lift

Options:

L.....Standard Length
S .....Shorter Length
EL2.....Extended Length

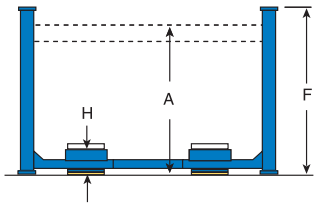

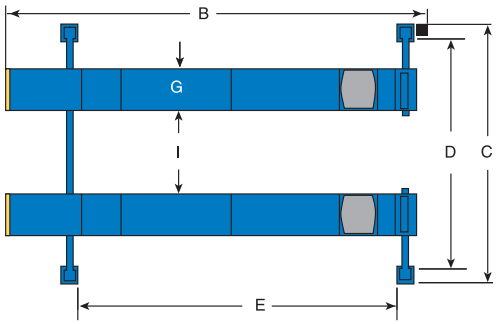

* Maximum wheelbase is based on a tire diameter of 29 1/2" (749mm). To reach max. wheel base move radius gage forward.

** Narrow bay models available with 10" (254mm) less overall width.

Consult factory for min. bay size before ordering.

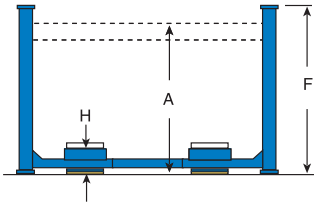

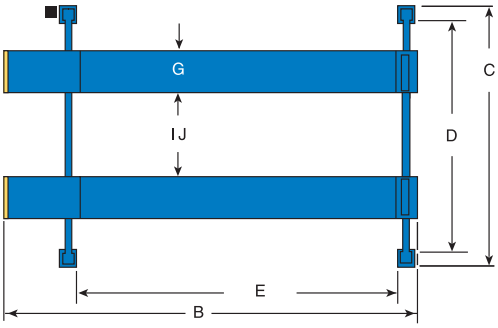

High Capacity Lifts

	Model:	SM18 SM181	SM300 SM301 SM302	RFL25
	Maximum Wheelbase*	194″ (4928mm) 230″ (5842mm)	235″ (5969mm) 271″ (6883mm) 307″ (7798mm)	163″ (4140mm)
A.	Rise	68″ (1727mm)	68″ (1727mm)	68″ (1727mm)
B.	Length Overall	22′ 11 3/16″ (6990mm) 25′ 11 3/16″ (7904mm)	25′ 8 1/8″ (7826mm) 28′ 8 1/8″ (8741mm) 31′ 8 1/8″ (9655mm)	22′ 5″ (6833mm)
C.	Width Overall	11′ 5 3/4″ (3499mm)	12′ 4 13/16″ (3780mm)	12′ 4 13/16″ (3780mm)
D.	Inside of Columns	121 1/2″ (3086mm)	132″ (3353mm)	132″ (3353mm)
E.	Between Columns	212″ (5385mm) 248″ (6299mm)	249″ (6325mm) 285″ (7239mm) 321″ (8153mm)	177″ (4496mm)
F.	Height of Columns	6′ 5 3/4″ (1975mm)	7′ 3/4″ (2153mm)	7′ 3/4″ (2153mm)
G.	Width of Runways	22″ (559mm)	24″ (610mm)	24″ (610mm)
H.	Height of Runways	7 1/2″ (191mm)	8 3/8″ (213mm)	8 3/8″ (213mm)
I.	Width Between Runways (min.)	43″ (1092mm)	41″ (1041mm)	13″ (330mm)
J.	Width Between Runways (max.)	46″ (1168mm)	48″ (1219mm)	48″ (1219mm)
	Lifting Capacity	18,000 lbs. (8165kg)	30,000 lbs. (13608kg)	25,000 lb (11340kg)
	Motor	2 HP	4 HP	4 HP
	Voltage Single Phase	208v-230v	208v-230v	208v-230v
	Time of Full Rise	100 seconds	105 seconds	105 seconds
	Min. Bay Size	16′ x 27′ (4877 x 8230mm) 16′ x 30′ (4877 x 9144mm)	16′ x 30′ (4877 x 9144mm) 16′ x 33′ (4877 x 10059mm) 16′ x 36′ (4577 x 10973mm)	16′ x 26′ (4577 x 7925mm)

Four-Post Lifts for Specific Vehicle Applications

Limo Lift	SM101	Extended runways for limousine service.
Fork Lift	RFL25	Designed with short/narrow runways for fork lifts and other equipment
Mercedes	AR43	Alignment rack designed specifically for Mercedes vehicles.

Shown: AR43
9,000 lbs. capacity

Shown: SM101
10,000 lbs. capacity

Shown: RFL25
25,000 lbs. capacity

Standard color of lifts are blue unless otherwise noted. Red, yellow, gray and black are available at no additional charge. Additional colors are available, consult your Rotary® representative for details.

Rotary Lift® is the world leader in service bay productivity. We offer a broad range of solutions to make any service bay more productive.

For more information and a complete guide to our product offering, visit us on the web at rotarylift.com or contact your local distributor today.

AVAILABLE FROM:

Airdraulics (QLD) Pty Ltd
68 Boyland Avenue
Coopers Plains 4108
Tel 07 3275 3333
Fax 07 3275 2699
Email info@airdraulics.com.au
www.airdraulics.com.au

Rotary World Headquarters
2700 Lanier Drive
Madison, IN 47250, USA
www.rotarylift.com

North America Contact Information

Sales:	p	800.640.5438
	f	800.578.5438
	e	userlink@rotarylift.com
Tech. Support:	p	800.445.5438
	f	800.578.5438
	e	userlink@rotarylift.com

World Wide Contact Information
World Headquarters/USA: 1.812.273.1622
Canada: 1.905.812.9920
European HQ/Germany: +49.771.9233.0
United Kingdom: +44.178.747.7711
Australasia: +60.3.7660.0285
Latin America/Caribbean: +54.3488.431.608
Middle East/Northern Africa: +49.771.9233.0
Southern Africa: 1.812.273.1622

ROTARY LIFT®
The World's Most Trusted Lift™

Rotary
A DOVER™ COMPANY

Lit# FourPostPAS_2006.08
©2006 Rotary®, Printed in U.S.A., All Rights Reserved. Unless otherwise indicated, ROTARY, DOVER and all other trademarks are property of Dover Corporation and its affiliates.